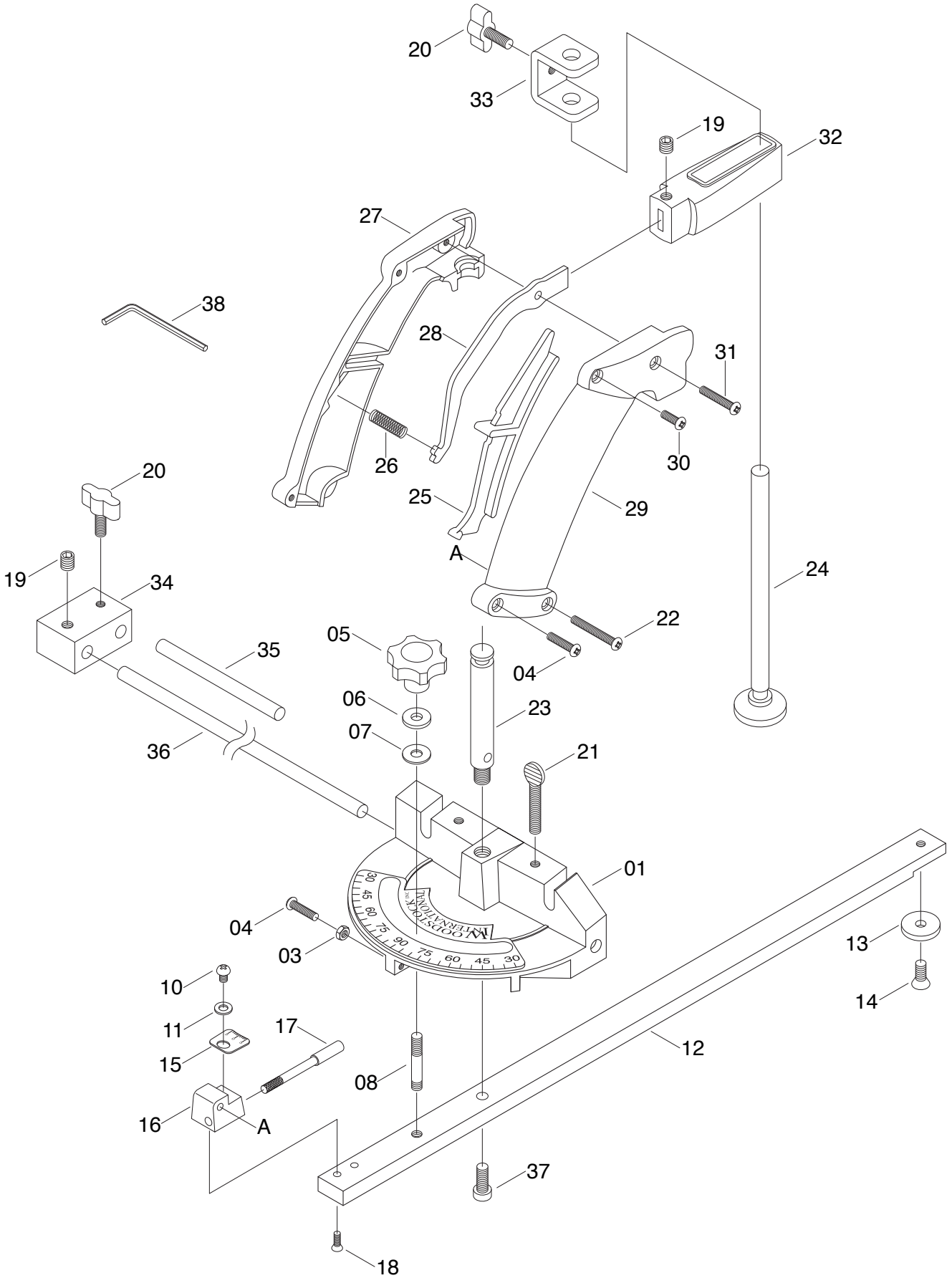G1822 CLAMPING MITER GAUGE